Alu-Cab™

ULTIMATE OVERLAND PRODUCTS

FITMENT INSTRUCTIONS

TOYOTA TACOMA 2016 EXPLORER & CONTOUR CANOPY

SHORT BED & LONG BED

Installation Instructions

Preliminary information

Installation and fitment instructions including tools required, fasteners included in kit, and the hardware included in kit.

Please following the instructions and check installation actions with the images in this document.

Alu-Cab recommends that all sealing work is allowed to cure for 24 hours, after which you may drive the vehicle on normal paved roads. Before driving off-road with your Alu-Cab product or operating your roof conversion, an additional cure period of 48 hours is required.

Failure to follow these instructions will void your warranty. Please ensure that you follow the sealant manufacturers curing time as per their technical data sheet.

These times may differ slightly from the times we have recommended.

Service Enquiries email
queries@alu-cab.com

Installation Instructions

Canopy Fitment – Tools, Fasteners & Hardware

1.1 Tools & Items Required

Ratchet
Allen key
13mm Socket
13mm Ring Flat Spanner

1.3 Hardware Required

TT-TOP-MNT-BRKT-01-00	6
TT-VERT-MNT-BRKT-01-00	6
TT-NUT-PLT-01-00	6
TT-SPACER-PLT-01-00	6

1.2 Fasteners Supplied (included with Side Boxes)

M8x30mm Hex Bolt	6
M8x20mm Hex Bolts	6
M8x30mm Cup Square Bolt	12
M8 Flat Washer	30
M8 Nyloc Nut	24
M8 Plastic Nut Cap	30
Elastic Band No.14	6

1.4 Item

Turpentine	
Cloth	
Black sealant, silicone or Sikaflex	
Window Cleaner	

Installation Instructions

Brackets included:

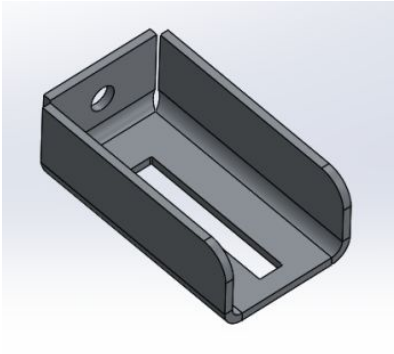

Fig 1: TT-TOP-MNT-BRKT-01-00

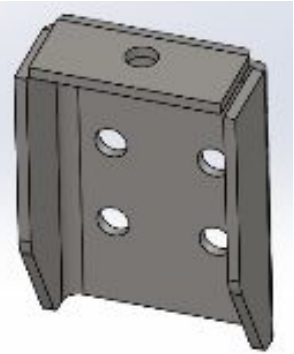

Fig 2: TT-VERT-MNT-BRKT-01-00

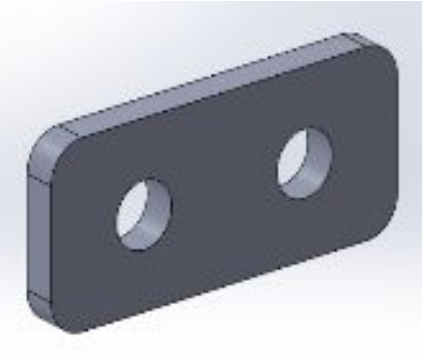

Fig 3: TT-SPACER-PLT-01-00

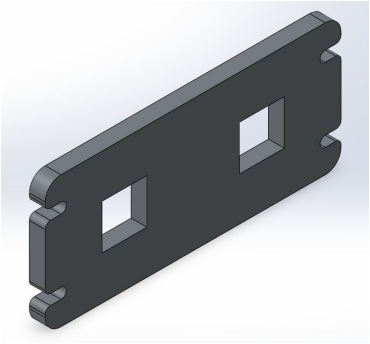

Fig 4: TT-NUT-PLT01-00

2 Mounting the canopy brackets to the load bin:

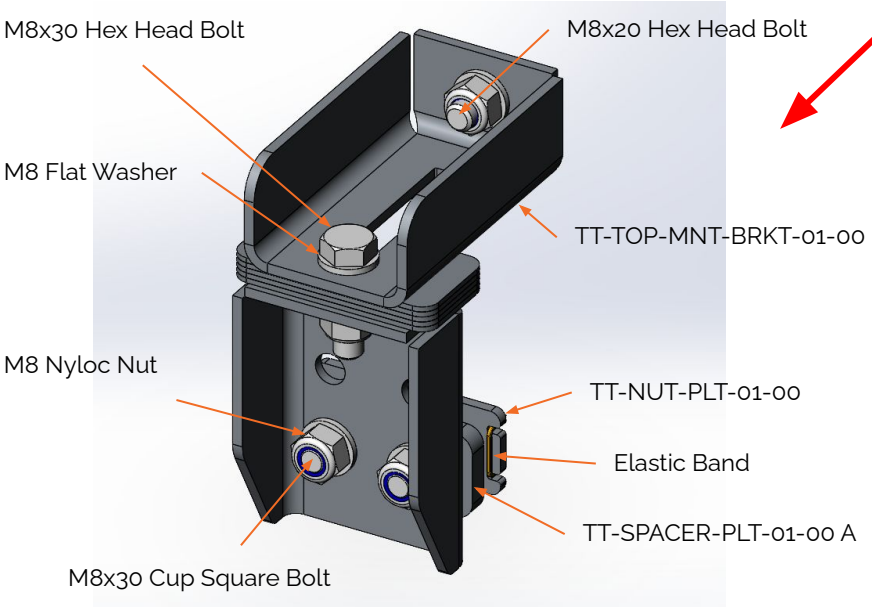

Fig 5: Isometric View of Tacome Bracket Kit Assembly

The Tacoma canopy has six bracket kits (3 per side) which are fitted to the load bin. Figure 5 , 6 & 7 below shows a bracket kit assembly.

Note fit the Cup Square Bolts into the Nut Plate as shown below.

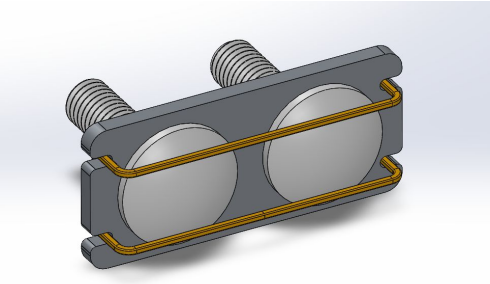

Fig 7: View of Tacoma Nut Plate Fitted with Cup Square Nuts and Elastic

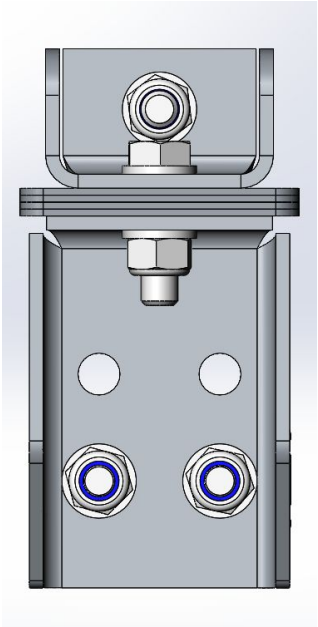

Fig 6: Tacoma Bracket kit Assembly Front View

2.1 Mounting the Support Brackets to the Load Bin:

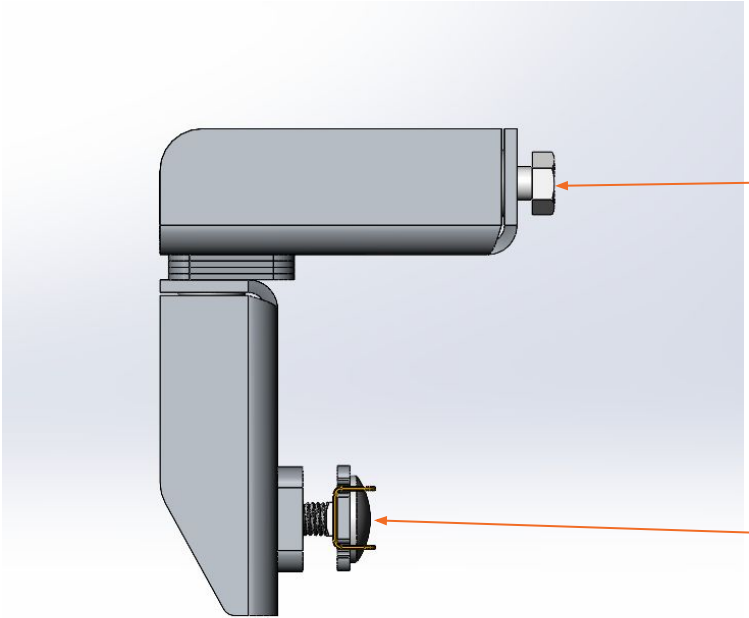

Fig 8: Tacoma Bracket Kit Assembly Side View

Installation Instructions

Positions of the bracket kits in the load bin:

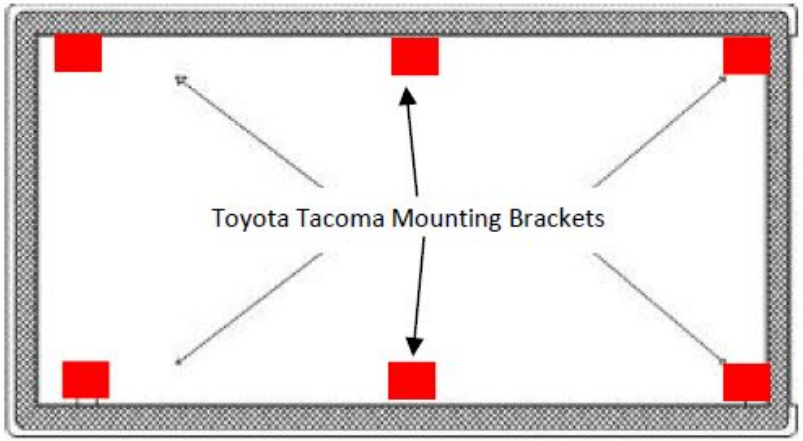

Fig 9: Top View of the Load Bin

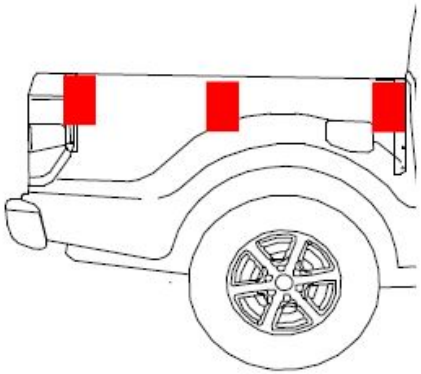

Fig 10: Side View of the Load Bin

Figures 9 and 10 show where the mounting brackets are fixed to the load bin.

Bolting the brackets to the load bin:

For each bracket assembly, first slide the nut plate assembly into the Toyota Tacoma load bin rail. TT-SPACER-PLT-01-00 will be sandwiched between the mounting bracket and the load bin rail as a spacer if needed. Use a combination of the nyloc nut and flat washer to fasten the mounting bracket to the rail. Using the M8x20 bolt that has been slid into the canopy frame's nut slot bolt bracket TT-TOP-MNT-BRKT-01-00 to the nut slot in the canopy frame and to TT-VERT-MNT-BRKT-01-00 to secure the canopy in place using shims to ensure even spacing across the load bin.

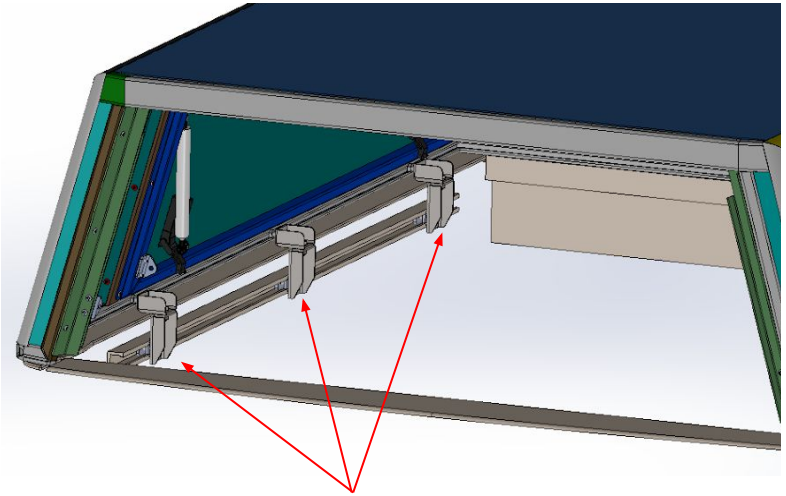

Fig 10: Tacoma Bracket kits.

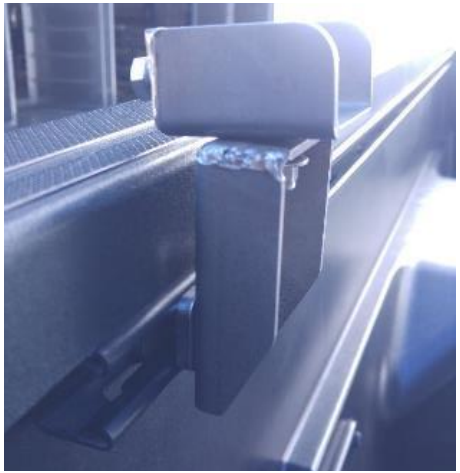

Fig 11: Photos of Bracket kit assembled in Tacoma Load Bin

3 Canopy Installation:

Keep all the doors of the canopy open besides the rear door when placing it onto the load bin. Check alignment before bolting down

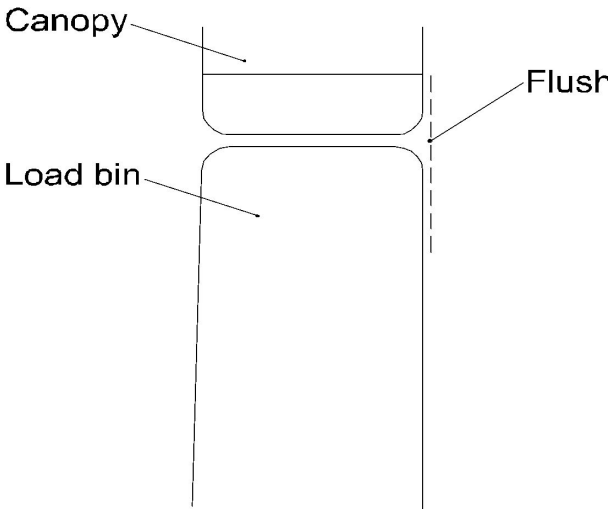

Disclaimer

All rights reserved. No part of this website may be reproduced, translated, stored in a retrieval system, or transmitted, in any form or by any means, electronic, mechanical, photocopying, recording or otherwise, without prior written permission of the owner.

Review all instructions information carefully before installation.

Any damages, direct or incidental to the installer and/or property due to incorrect installation of any parts are the responsibility of the installer. Due to the various applications and fitment options available, the responsibility lies with the user to ensure all mounting points are secure and tight before every trip.

If unsure, consult with your Distributor regarding the operations of our products.

Users are advised to be mindful of the load they are carrying and drive in accordance with road conditions.

WARNING

Always wear appropriate PPE (Personal protection equipment) when fitting our products. Although the mounting kit is designed to be DIY, if you have any doubts or concerns, contact an accredited fitment centre to carry out the work. Alu-Cab will not be liable for any injury to persons, and/or damage to products and/or vehicles.

While Alu-Cab Holdings takes reasonable measures to ensure that the contents of this Website are accurate and complete, Alu-Cab Holdings makes no representations or warranties, whether express or implied, as to the quality, timeliness, operation, integrity, availability or functionality of this Website or as to the accuracy, completeness or reliability of any information on this Website. Alu-Cab Holdings reserves the right to make changes, corrections and/or improvements to the information and to the products and programs described in such information, at any time without notice.

Alu-Cab Holdings will use reasonable endeavours to maintain the availability of the Website, except during scheduled maintenance periods, and reserves the right to discontinue providing the Website or the service or any part thereof with or without notice to you. Any person who accesses this Website or relies on this Website or on the information contained in this Website does so at his or her own risk.

Occasionally, at our discretion, we may include or offer third-party products or services on our website. These third-party sites have separate and independent privacy policies. We therefore have no responsibility or liability for the content and activities of these linked sites. Nonetheless, we seek to protect the integrity of our site and welcome any feedback about these sites.